Special Segments in Triangles Worksheet

MATH MONKS

1 In the given triangle, $\overleftrightarrow{AC}$ is the perpendicular bisector of $\overleftrightarrow{BD}$

a) State the relationship between BC and BD

b) State the relationship between m∠BCA and m∠DCA

c) State the relation between BA and AD

d) What type of triangle is ΔABD

e) $\overline{BA} \cong \overline{BC}$, True or False

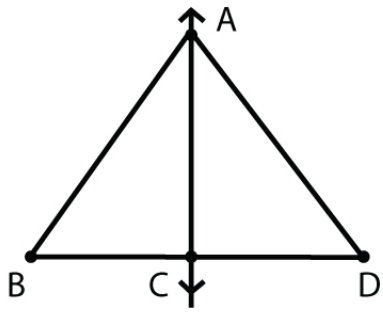

2 In the triangle given below, XZ is the angle bisector. If ∠XYZ = 70° and ∠XWZ = 60°, Find ∠YXZ and ∠ZXW.

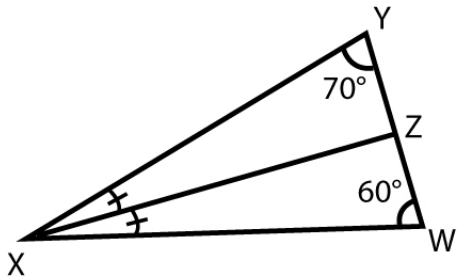

_____

3 In the triangle given below, CD is the median. If ∠CYD = 60° and ∠CDX = 120°. Find ∠YCD

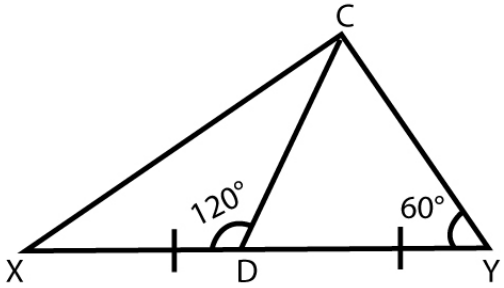

_____

4 In the triangle given below, GI = 16 inches and HJ = 32 inches. Find the area of ΔGHJ.

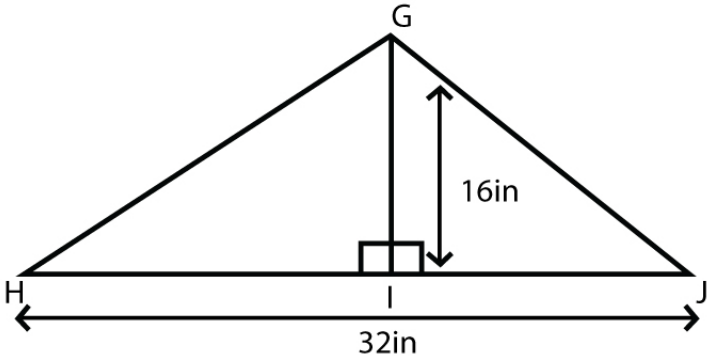

_____

Answers

Special Segments in Triangles Worksheet

MATH MONKS

1 In the given triangle, $\overleftrightarrow{AC}$ is the perpendicular bisector of $\overleftrightarrow{BD}$

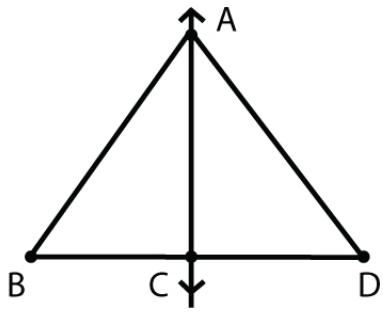

a) State the relationship between BC and BD

$BC = \frac{1}{2}BD$

b) State the relationship between m∠BCA and m∠DCA

m∠BCA = m∠DCA = 90°

c) State the relation between BA and AD

BA = AD

d) What type of triangle is ΔABD

Isosceles Triangle

e) $\overline{BA} \cong \overline{BC}$, True or False

False

2 In the triangle given below, XZ is the angle bisector. If ∠XYZ = 70° and ∠XWZ = 60°, Find ∠YXZ and ∠ZXW.

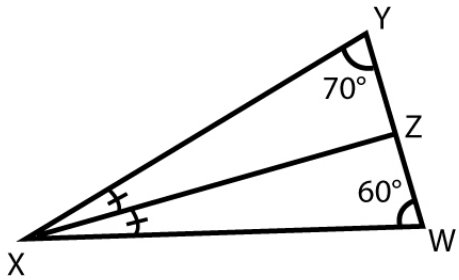

∠YXZ = 25°, ∠ZXW = 25°

3 In the triangle given below, CD is the median. If ∠CYD = 60° and ∠CDX = 120°. Find ∠YCD

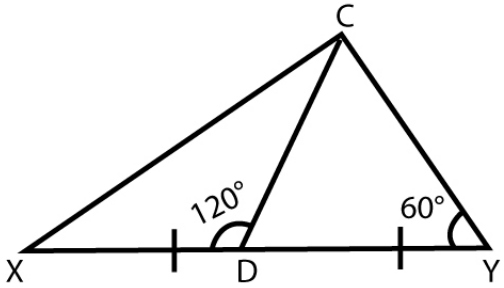

∠YCD = 60°

4 In the triangle given below, GI = 16 inches and HJ = 32 inches. Find the area of ΔGHJ.

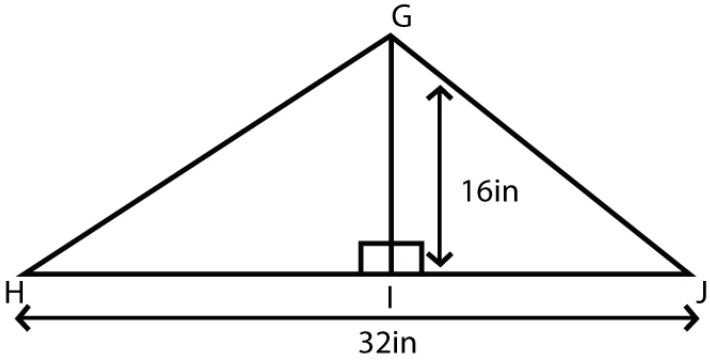

256 in^2